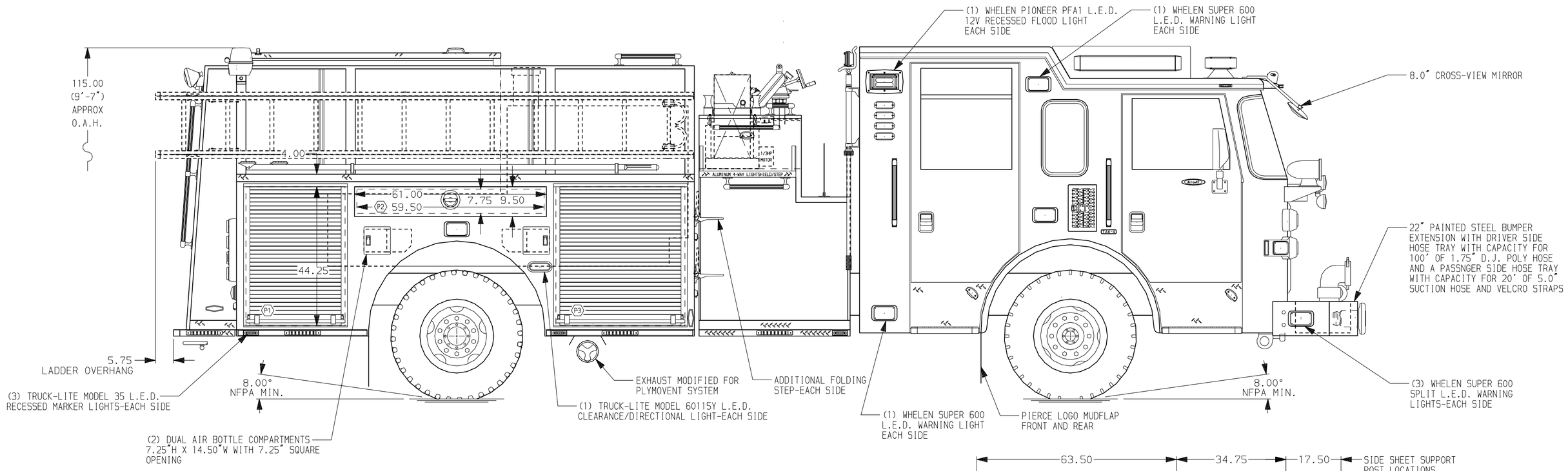

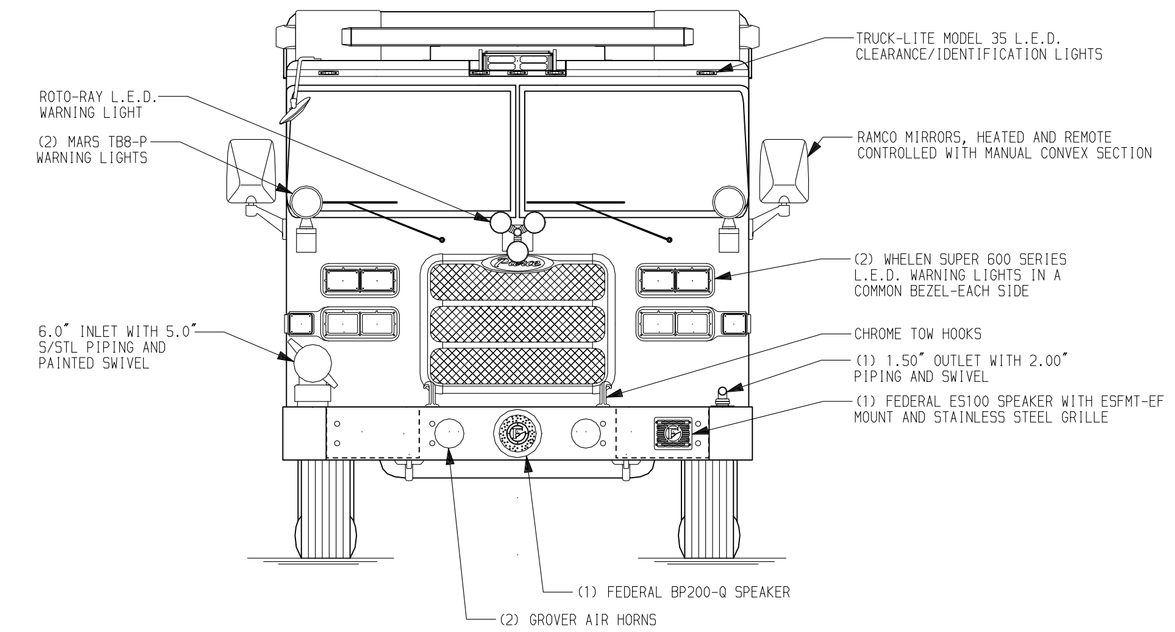

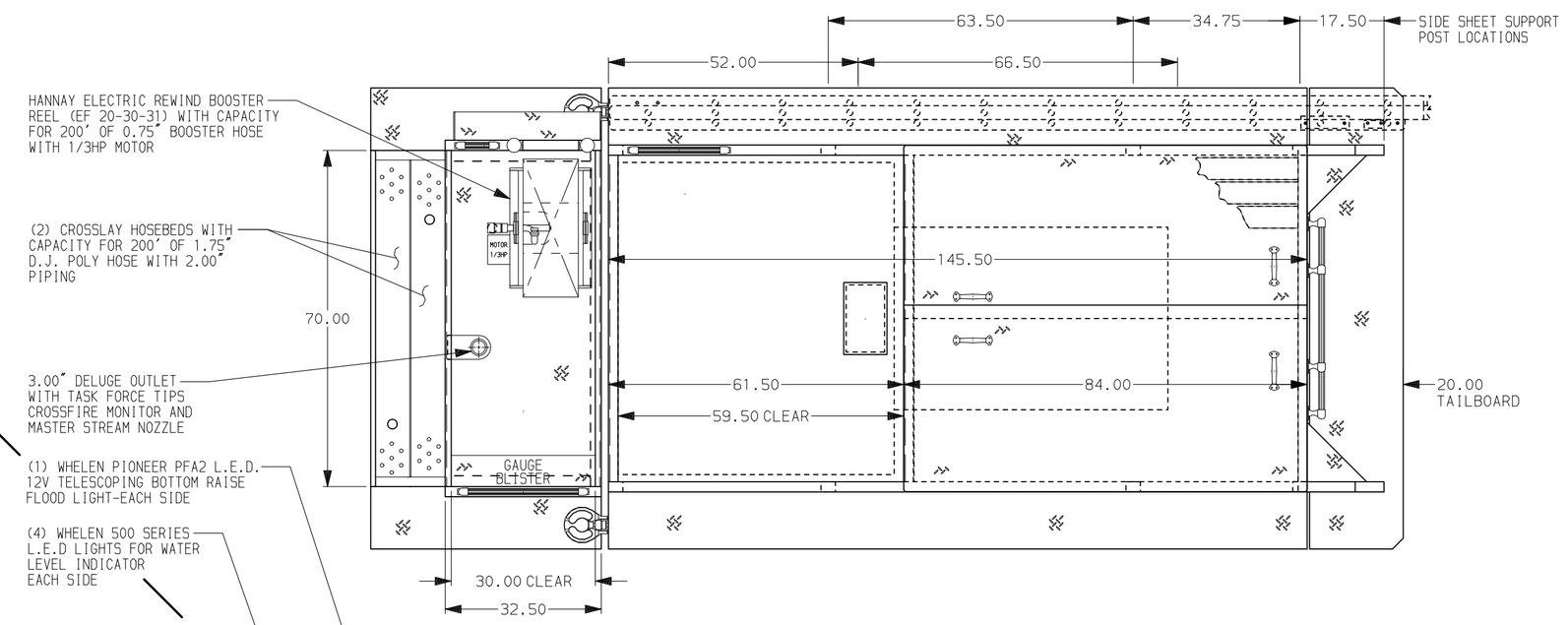

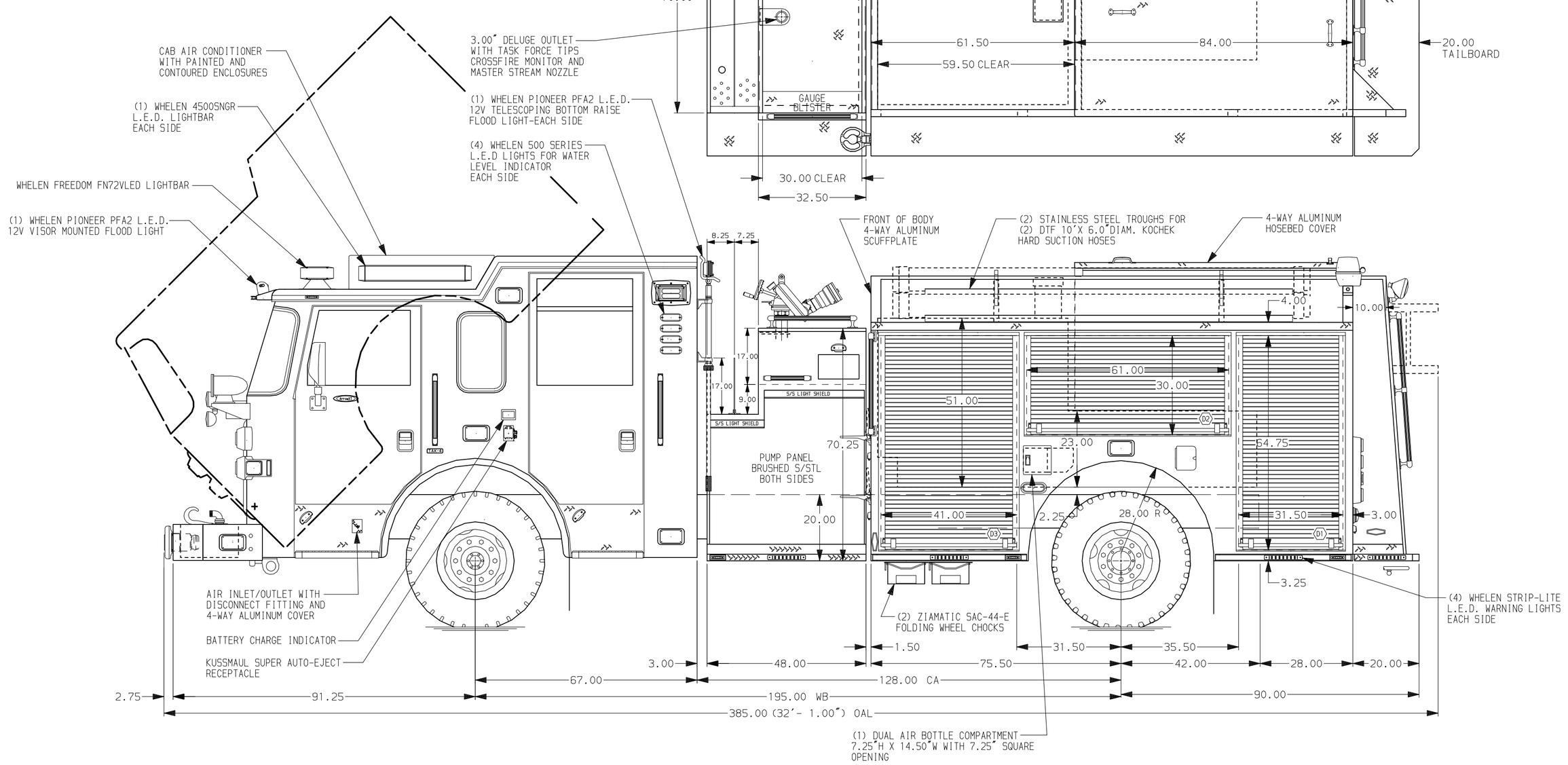

HOSEBED CAPACITIES

1. 200' OF 1.75" D.J. POLY HOSE
2. 200' OF 1.75" D.J. POLY HOSE
3. 1200' OF 4.00" D.J. POLY HOSE
4. 200' OF 2.50" D.J. POLY HOSE

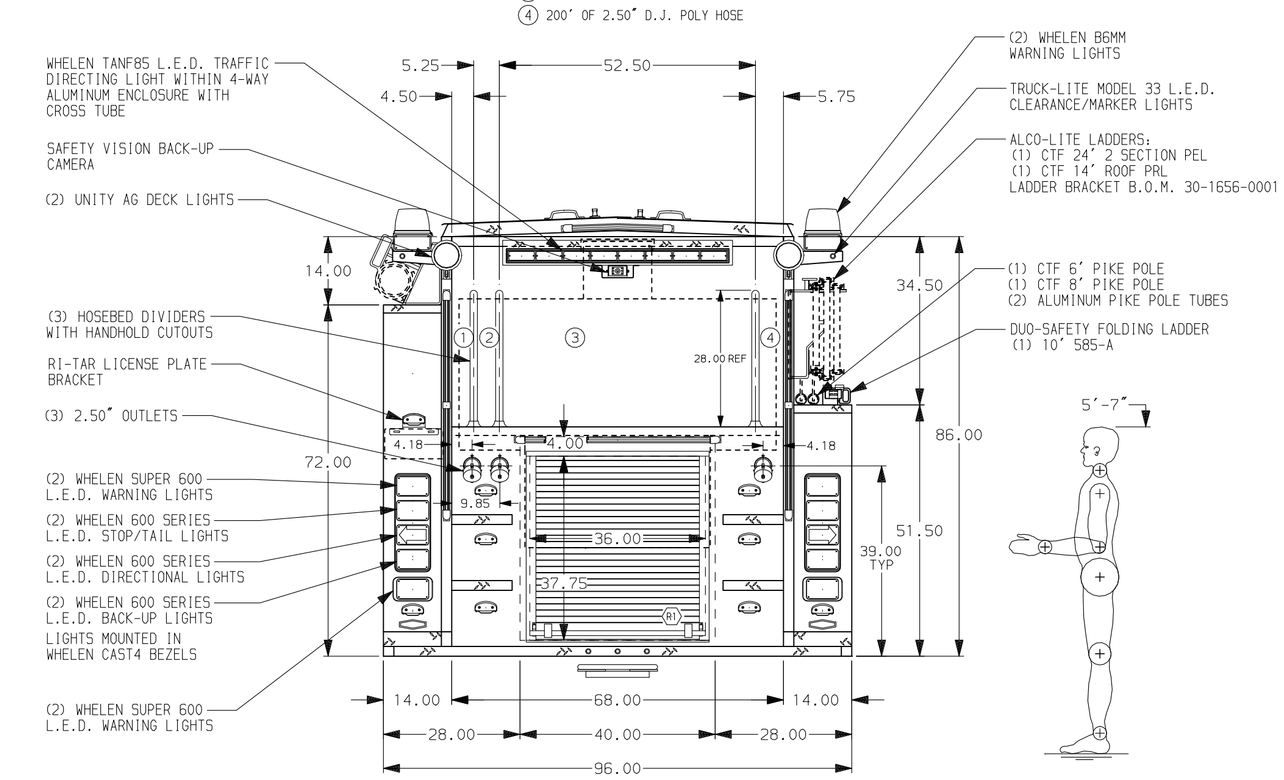

STAINLESS STEEL BODY

MAXIMUM O.A.L. 396.00"

MAXIMUM O.A.H. 115.00"

NOTE

DIMENSIONS SHOWN ARE APPROXIMATE AND ARE SUBJECT TO MINOR DEVIATIONS AS MAY OCCUR OR BE NECESSARY IN CONSTRUCTION.
MINOR DETAILS NOT SHOWN.

NOTES:

1. AIR INLET/OUTLET WITH DISCONNECT LOCATED ON D.S. PUMP PANEL
2. AIR OUTLET WITH SHUT-OFF VALVE LOCATED ON D.S. PUMP PANEL
3. MOUNTING BASE FOR AM/FM RADIO ANTENNA LOCATED PER SHOP ORDER
4. MOUNTING BASE FOR 2-WAY RADIO ANTENNA LOCATED PER SHOP ORDER
5. VEHICLE DATA RECORDER
6. ALUMINUM 4-WAY ON CAB ROOF
7. KUSSMAUL BATTERY CHARGER LOCATED IN CAB BELOW EMS COMPARTMENT
8. "ON-SCENE" L.E.D. LIGHTS BELOW ALUMINUM HOSEBED COVER
9. S/STL PROTECTIVE GUARD FOR ROLL-UP DOOR IN COMPARTMENT D1, D2, D3, P1, P3 & R1
10. ONE FLOOR MOUNTED SLIDE-OUT TRAY (500#,2"SIDES) IN COMPT. D3 & R1
11. ONE ZIAMATIC HOLDER BRACKETS FOR SCBA CYLINDERS LOCATED ?
12. ONE ADJUSTABLE SHELF IN COMPARTMENT P1, P3 & R1
    TWO ADJUSTABLE SHELVES IN COMPARTMENT D1-UPPER & D3
13. ONE SHELF TRACK SET IN COMPARTMENT D1, D2, D3, P1, P3 & R1
14. "ON-SCENE" L.E.D. LIGHTS IN COMPARTMENT D1, D2, D3, P1, P3 & R1
15. PERIMETER SCENE LIGHTS LOCATED PER SHOP ORDER
16. WHELEN 500 L.E.D. INTERIOR CAB/CREW CAB DOOR WARNING LIGHTS
17. TWO 120V STRAIGHT BLADE DUPLEX RECEPTACLES IN EMS COMPARTMENT
18. PAINTED ALUMINUM PLATE ON CAB ROOF FOR DEPARTMENT NUMBERS
19. STAINLESS STEEL FENDER CROWNS ON CAB

REV	DATE	BY	CH
V	04MAR10	PVA	-

CUSTOMER APPROVAL

APPROVED BY:

DATE:

Pierce MANUFACTURING INC.

CHASSIS DATA	
MAKE	PIERCE
MODEL	AX6710
TITLE	1500-D-750P 145 BDY F.HT./FRT & REAR-DS,3/4 HT.-PS BOOSTER REEL
FOR	ARNOLD VOLUNTEER FIRE DEPARTMENT ARNOLD, MD
DWG NO.	23245AD
JOB NO.	23245
SCALE	1:24
DATE	
DRAWN BY	PVA
	22FEB10
CHECKED BY	WKL
	25FEB10
SHEET SIZE	D
SHEET NO.	1 OF 1